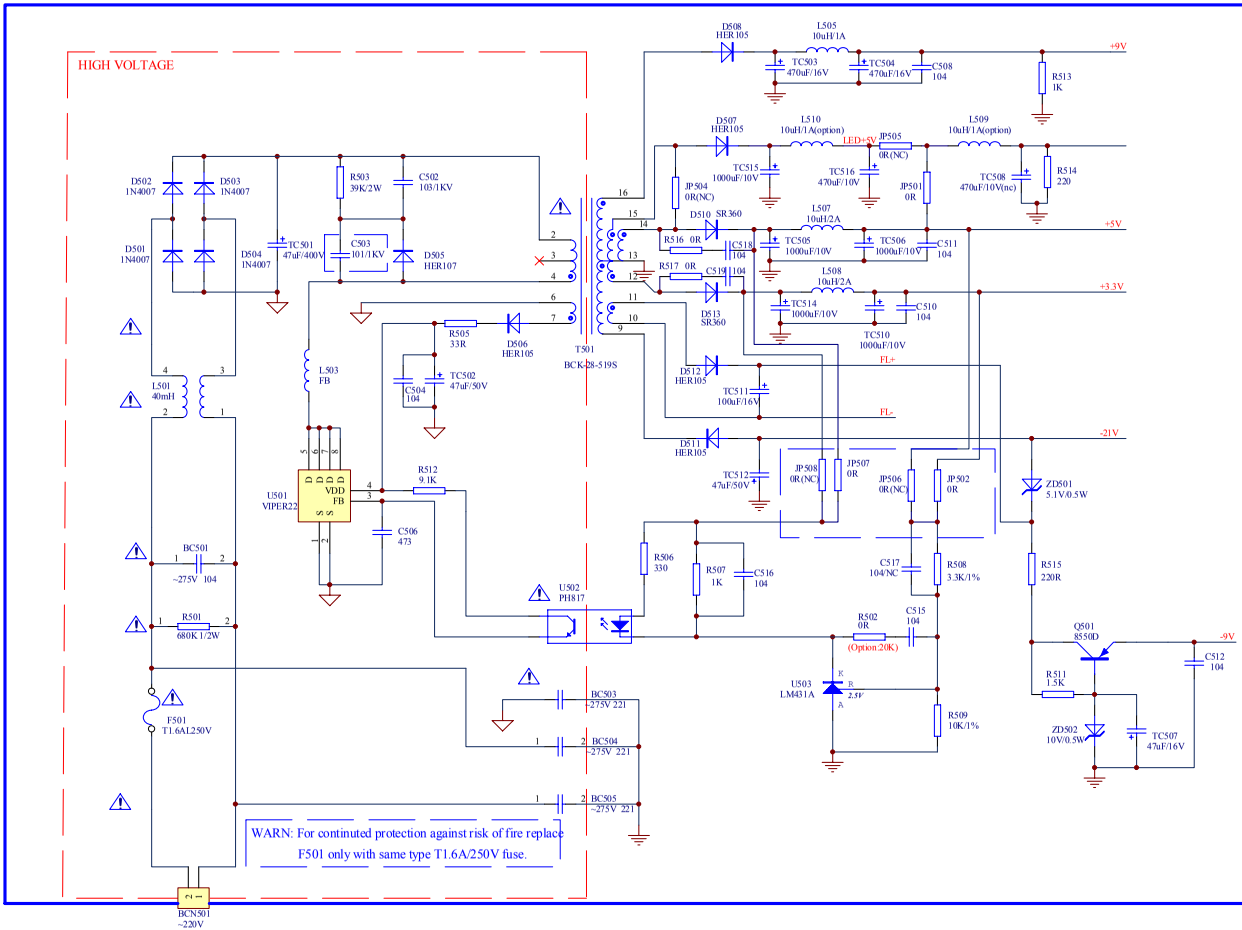
HIGH VOLTAGE
D502 1N4007
D503 1N4007
D501 1N4007
D504 1N4007
TC501 47uF/400V
R503 39K/2W
C502 103/1KV
C503 101/1KV
D505 HER107
L501 40mH
L503 FB
BC501 ~275V 104
R501 680K 1/2W
F501 T1.6AL250V
BCN501 ~220V
U501 VIPER22
VDD FB
R505 33R
D506 HER105
C504 104
TC502 47uF/50V
R512 9.1K
C506 473
T501 BCK-28-519S
U502 PH817
BC503 ~275V 221
BC504 ~275V 221
BC505 ~275V 221
WARN: For continuted protection against risk of fire replace
F501 only with same type T1.6A/250V fuse.
D508 HER105
L505 10uH/1A
TC503 470uF/16V
TC504 470uF/16V
C508 104
R513 1K
+9V
D507 HER105
L510 10uH/1A(option)
LED+5V
JP505 0R(NC)
L509 10uH/1A(option)
TC515 1000uF/10V
TC516 470uF/10V
JP501 0R
TC508 470uF/10V(nc)
R514 220
JP504 0R(NC)
D510 SR360
L507 10uH/2A
+5V
R516 0R
C518 104
TC505 1000uF/10V
TC506 1000uF/10V
C511 104
R517 0R
C519 104
L508 10uH/2A
+3.3V
D513 SR360
TC514 1000uF/10V
C510 104
TC510 1000uF/10V
FL+
D512 HER105
TC511 100uF/16V
FL-
D511 HER105
-21V
TC512 47uF/50V
JP508 0R(NC)
JP507 0R
JP506 0R(NC)
JP502 0R
ZD501 5.1V/0.5W
R506 330
R507 1K
C516 104
C517 104/NC
R508 3.3K/1%
R515 220R
R502 0R (Option:20K)
C515 104
Q501 8550D
-9V
C512 104
U503 LM431A
2.5V
R509 10K/1%
R511 1.5K
ZD502 10V/0.5W
TC507 47uF/16V