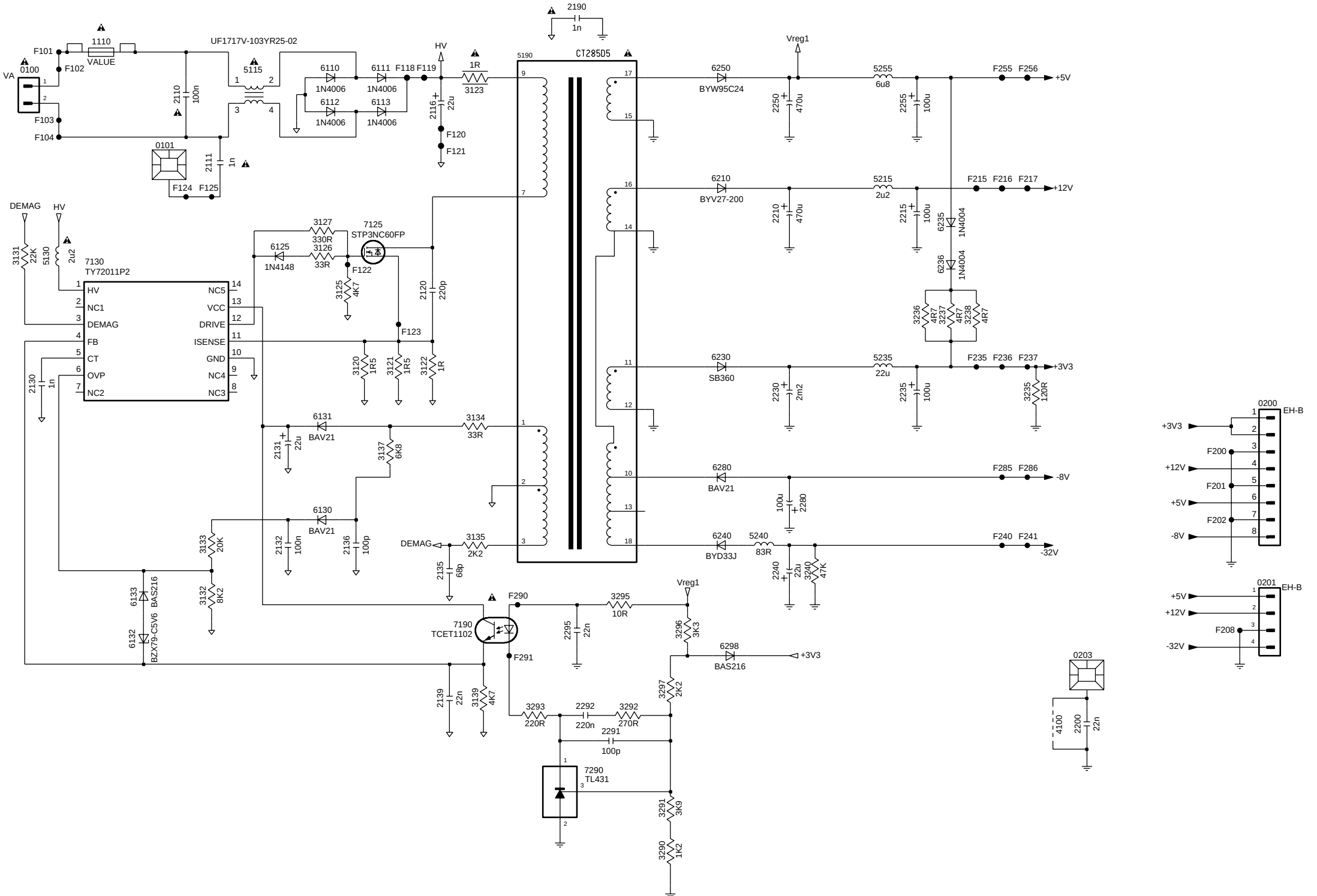FOR INFORMATION ONLY (NO SERVICE PARTS WILL BE AVAILABLE)