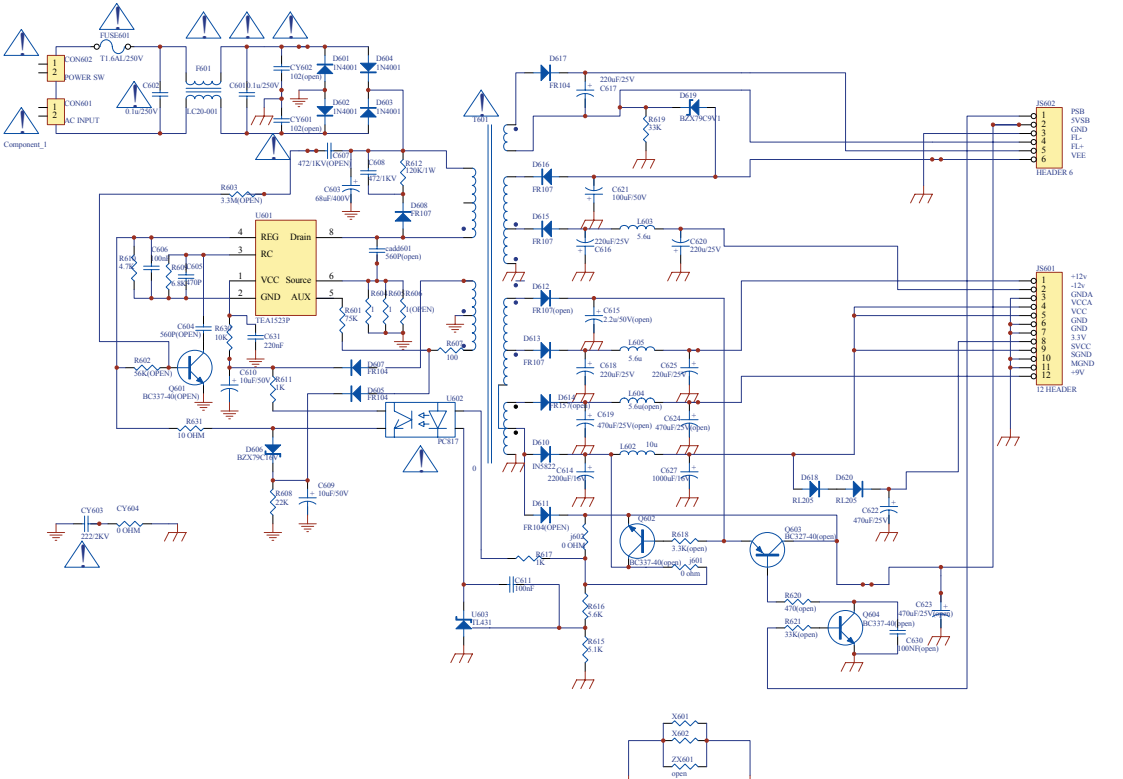
FUSE601
T1 6AL/250V
CON602
POWER SW
CON601
AC INPUT
Component_1
C602
0.1u/250V
F601
LC20-001
C601 0.1u/250V
CY602
102(open)
CY601
102(open)
D601
1N4001
D604
1N4001
D602
1N4001
D603
1N4001
IC607
472/1KV(OPEN)
C608
472/1KV
R612
120K/1W
C603
68uF/400V
D608
FR107
R603
3.3M(OPEN)
U601
REG
Drain
RC
VCC
Source
GND
AUX
TEA1523P
R615
4.7K
C606
100nF
R607
C605
R608
2.2/10P
C604
560P(OPEN)
R610
10K
C631
220nF
R602
56K(OPEN)
Q601
BC337-40(OPEN)
C610
10uF/50V
R611
1K
R601
75K
R603
R604
1(OPEN)
cadd601
560P(open)
R605
100
D607
FR104
D605
FR104
U602
PC817
R631
10 OHM
D606
BZX79C18V
R608
22K
C609
10uF/50V
CY603
222/2KV
CY604
0 OHM
T601
D617
FR104
220uF/25V
C617
D619
BZX79C9V1
R619
23K
D616
FR107
C621
100uF/50V
D615
FR107
220uF/25V
C616
L603
5.6u
C620
220u/25V
D612
FR107(open)
C615
2.2u/50V(open)
D613
FR107
L605
5.6u
C618
220uF/25V
C625
220uF/25V
D614
FR107(open)
L604
5.6u(open)
C619
470uF/25V(open)
C624
470uF/25V(open)
D610
1N5822
L602
10u
C614
220uF/16V
C627
1000uF/16V
D611
FR104(OPEN)
j602
0 OHM
R617
1K
C611
100uF
U603
TL431
R616
5.6K
R615
5.1K
Q602
BC337-40(open)
R618
3.3K(open)
j601
0 ohm
Q603
BC327-40(open)
D618
R1205
D620
R1205
C622
470uF/25V
R620
470(open)
R621
33K(open)
Q604
BC337-40(open)
C623
470uF/25V(open)
C630
100NF(open)
JS602
PSB
5VSB
GND
FL-
FL+
VEE
HEADER 6
JS601
+12v
-12v
GNDA
VCCA
VCC
GND
GND
3.3V
SVCC
SGND
MGND
+9V
12 HEADER
X601
X602
ZX601
open