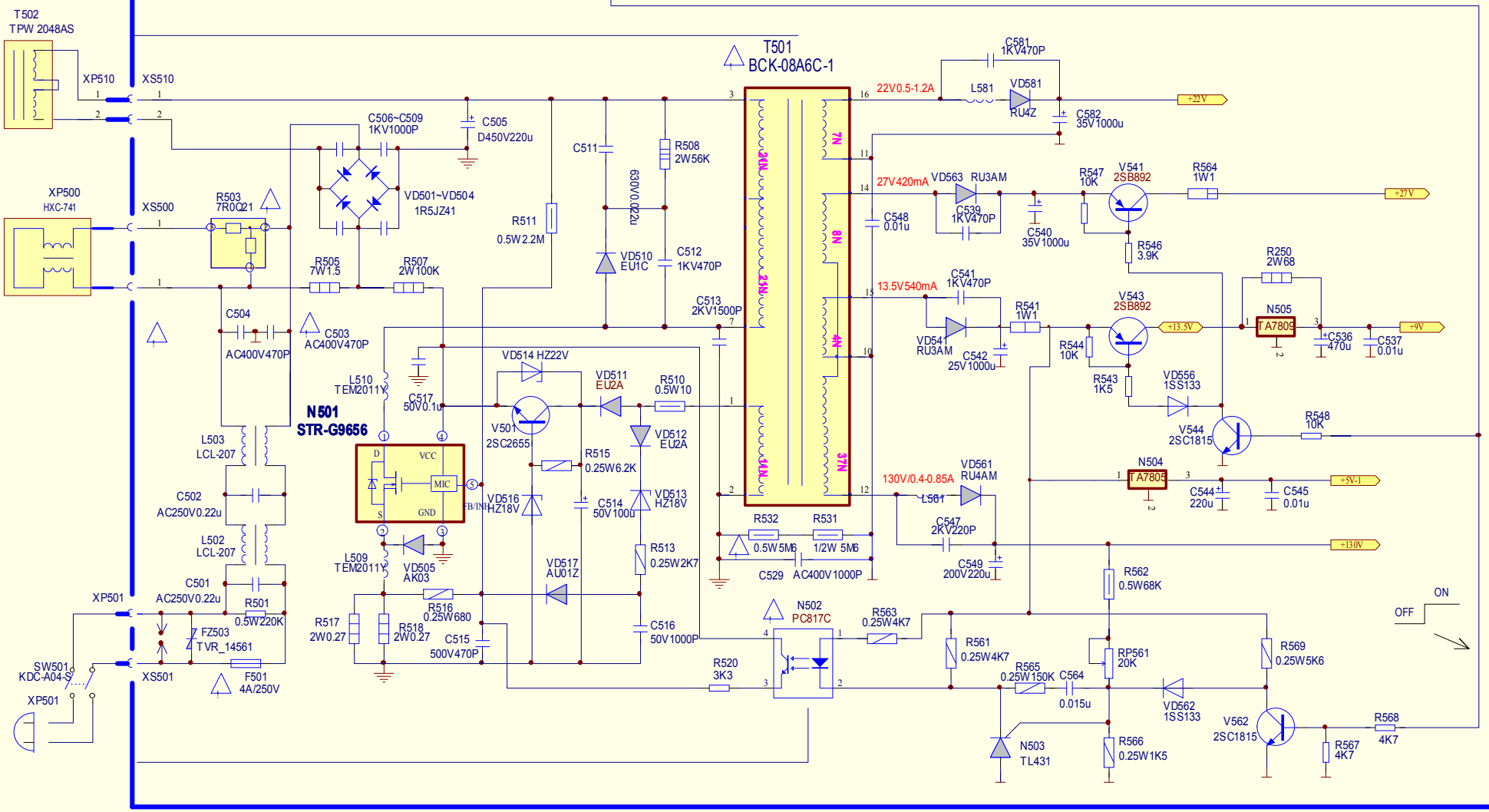
T502
TPW 2048AS
XP510
XS510
XP500
HXC-741
XS500
R503
7R0Q21
C506~C509
1KV1000P
VD501~VD504
1R5JZ41
C505
D450V220u
C511
630V0.22u
R508
2W56K
R511
0.5W2.2M
R505
7W1.5
R507
2W100K
C504
AC400V470P
C503
AC400V470P
L510
TEM2011Y
C517
50V0.1u
N501
STR-G9656
VCC
MIC
GND
FB/INH
L503
LCL-207
C502
AC250V0.22u
L502
LCL-207
C501
AC250V0.22u
XP501
R501
0.5W220K
FZ503
TVR_14561
SW501
KDC-A04-S
XS501
F501
4A/250V
L509
TEM2011Y
VD505
AK03
R516
0.25W680
R517
2W0.27
R518
2W0.27
C515
500V470P
VD514 HZ22V
V501
2SC2655
VD516
HZ18V
VD511
EU2A
R515
0.25W6.2K
C514
50V100u
VD517
AU01Z
VD510
EU1C
C512
1KV470P
R510
0.5W10
VD512
EU2A
VD513
HZ18V
R513
0.25W2K7
C516
50V1000P
T501
BCK-08A6C-1
C513
2KV1500P
R532
0.5W5M6
R531
1/2W 5M6
C529
AC400V1000P
N502
PC817C
R520
3K3
R563
0.25W4K7
22V0.5-1.2A
C581
1KV470P
L581
VD581
RU4Z
C582
35V1000u
+22V
27V420mA
VD563
RU3AM
C539
1KV470P
C540
35V1000u
R547
10K
V541
2SB892
R564
1W1
+27V
R546
3.9K
C548
0.01u
13.5V540mA
C541
1KV470P
VD541
RU3AM
C542
25V1000u
R541
1W1
V543
2SB892
+13.5V
R544
10K
R543
1K5
VD556
1SS133
V544
2SC1815
R548
10K
R250
2W68
N505
TA7809
C536
470u
C537
0.01u
+9V
N504
TA7805
C544
220u
C545
0.01u
+5V-1
130V/0.4-0.85A
VD561
RU4AM
L561
C547
2KV220P
C549
200V220u
+130V
R562
0.5W68K
R561
0.25W4K7
RP561
20K
R565
0.25W150K
C564
0.015u
R566
0.25W1K5
N503
TL431
VD562
1SS133
R569
0.25W5K6
V562
2SC1815
R567
4K7
R568
4K7
ON
OFF