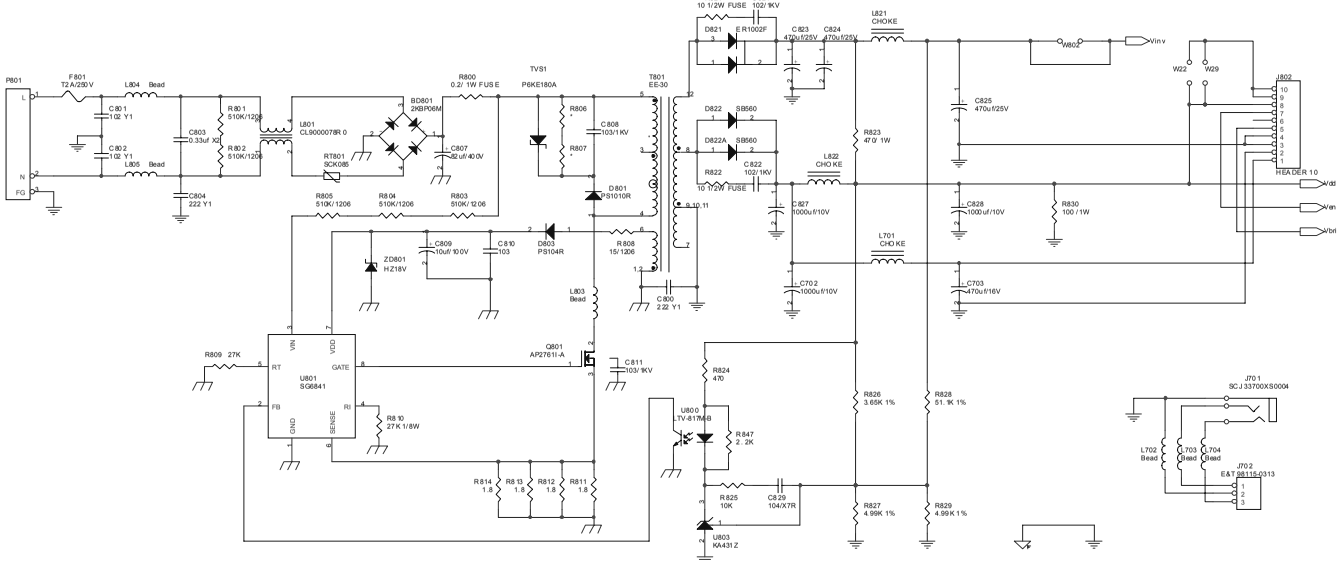

P801
F801
T2A/250V
L804 Bead
C801
102 Y1
C802
102 Y1
L805 Bead
C803
0.33uf X2
R801
510K/1206
R802
510K/1206
C804
222 Y1
L801
CL9000078R 0
BD801
2KBP06M
RT801
SCK085
C807
82uf/400V
R800
0.2/ 1W FUSE
TVS1
P6KE180A
R806
R807
C808
103/1KV
T801
EE-30
D801
PS1010R
R805
510K/1206
R804
510K/1206
R803
510K/1206
ZD801
HZ18V
C809
10uf/100V
C810
103
D803
PS104R
R808
15/1206
L803
Bead
C800
222 Y1
R809 27K
U801
SG6841
VIN
VDD
RT
GATE
FB
RI
GND
SENSE
R810
27K 1/8W
Q801
AP2761I-A
C811
103/1KV
R814
1.8
R813
1.8
R812
1.8
R811
1.8
10 1/2W FUSE 102/1KV
D821
ER1002F
C823
470u/125V
C824
470u/125V
L821
CHOKE
D822
SB560
D822A
SB560
R822
10 1/2W FUSE
C822
102/1KV
L822
CHOKE
C827
1000uf/10V
C702
1000uf/10V
R823
47 0 1W
C825
470u/125V
C828
1000uf/10V
R830
100 /1W
L701
CHOKE
C703
470uf/16V
W802
Vinv
W22
W29
J802
HEADER 10
Vdd
Ven
Vbri
R824
470
U800
TV-817MB
R847
2. 2K
R825
10K
C829
104/X7R
U803
KA431Z
R826
3.65K 1%
R827
4.99K 1%
R828
51. 1K 1%
R829
4.99K 1%
J701
SCJ 33700XS0004
L702
Bead
L703
Bead
L704
Bead
J702
EAT 98115-0313