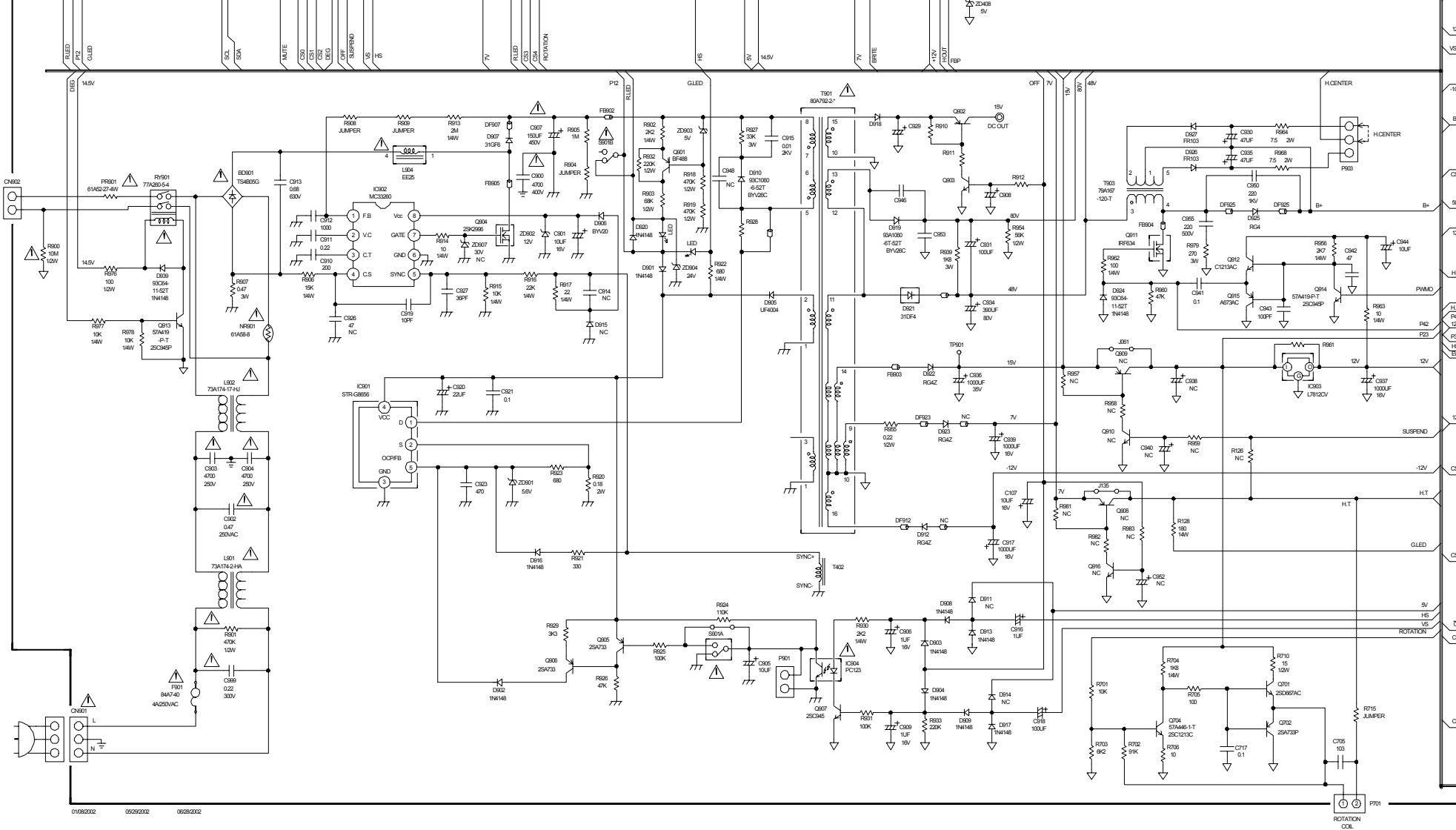

CN902
PR901 61A52-27-4W
RY901 77A260-5-4
BD901 TS4B05G
IC902 MC33260
L904 EE25
R908 JUMPER
R909 JUMPER
R913 2M 1/4W
DF907 D907 31GF6
C907 150UF 450V
R905 1M
R904 JUMPER
FB902
S901B
FB905
C900 4700 400V
C913 0.68 630V
C912 1000
C911 0.22
C910 200
R906 15K 1/4W
C926 47 NC
C919 10PF
R914 10 1/4W
Q904 2SK2996
ZD907 30V NC
ZD902 12V
C901 10UF 16V
D906 BYV20
C927 36PF
R915 10K 1/4W
R916 22K 1/4W
R917 22 1/4W
C914 NC
D915 NC
R902 2K2 1/4W
R932 220K 1/2W
R903 68K 1/2W
D920 1N4148
D901 1N4148
ZD903 5V
Q901 BF488
R918 470K 1/2W
R919 470K 1/2W
LED
D904 24V
R922 680 1/4W
R927 33K 3W
C915 0.01 2KV
C948 NC
D910 93C1060 -6-52T BYV26C
R928
D905 UF4004
T901 80A792-2-*
D918
C929
R910
Q902
15V DC OUT
R911
Q903
R912
C908
C946
D919 93A1060 -6T-52T BYV26C
C953
R939 1K8 3W
C931 100UF
R954 56K 1/2W
D921 31DF4
C934 390UF 80V
TP901
FB903
D922 RG4Z
C936 1000UF 35V
R957 NC
J061
Q909 NC
R958 NC
Q910 NC
C938 NC
R961
IC903 L7812CV
C937 1000UF 16V
R955 0.22 1/2W
DF923
D923 RG4Z
C939 1000UF 16V
C940 NC
R959 NC
R126 NC
C107 10UF 16V
J135
Q908 NC
R981 NC
R982 NC
R983 NC
R128 180 1/4W
Q916 NC
C952 NC
DF912
D912 RG4Z
C917 1000UF 16V
SYNC+
SYNC-
T402
D916 1N4148
R921 330
R924 110K
S901A
R929 3K3
Q905 2SA733
Q906 2SA733
R925 100K
R926 47K
C905 10UF
P901
IC904 PC123
Q907 2SC945
R930 2K2 1/4W
C906 1UF 16V
D903 1N4148
D908 1N4148
D911 NC
D913 1N4148
C916 1UF
D904 1N4148
D914 NC
R931 100K
C909 1UF 16V
R933 220K
D909 1N4148
D917 1N4148
C918 100UF
R701 10K
R704 1K8 1/4W
R705 100
R710 15 1/2W
Q701 2SD667AC
Q704 57A446-1-T 2SC1213C
Q702 2SA733P
R703 6K2
R702 91K
R706 10
C717 0.1
R715 JUMPER
C705 103
P701
ROTATION COIL
CN901
F901 84A7-40 4A/250VAC
R901 470K 1/2W
C999 0.22 300V
L901 73A174-2-HA
C902 0.47 250VAC
C903 4700 250V
C904 4700 250V
L902 73A174-17-HJ
NR901 61A58-8
R907 0.47 3W
R976 100 1/2W
D939 93C64-11-52T 1N4148
R977 10K 1/4W
R978 10K 1/4W
Q913 57A419 -P-T 2SC945P
R900 10M 1/2W
14.5V
IC901 STR-G8656
VCC
OCP/FB
GND
C920 22UF
C921 0.1
C923 470
ZD901 5.6V
R923 680
R920 0.18 2W
D918 1N4148
R930 2K2 1/4W
C906 1UF 16V
D903 1N4148
D908 1N4148
D911 NC
D913 1N4148
C916 1UF
D904 1N4148
D914 NC
R931 100K
C909 1UF 16V
R933 220K
D909 1N4148
D917 1N4148
C918 100UF
D902 1N4148
R925 100K
R926 47K
C905 10UF
P901
Q907 2SC945
R901 470K 1/2W
C902 0.47 250VAC
C903 4700 250V
C904 4700 250V
L902 73A174-17-HJ
L901 73A174-2-HA
CN901
F901 84A7-40 4A/250VAC
C913 0.68 630V
R907 0.47 3W
R976 100 1/2W
D939 93C64-11-52T 1N4148
R977 10K 1/4W
R978 10K 1/4W
Q913 57A419 -P-T 2SC945P
R900 10M 1/2W
14.5V
PR901 61A52-27-4W
RY901 77A260-5-4
BD901 TS4B05G
R908 JUMPER
R909 JUMPER
R913 2M 1/4W
DF907 D907 31GF6
C907 150UF 450V
R905 1M
R904 JUMPER
FB902
S901B
FB905
C900 4700 400V
C912 1000
C911 0.22
C910 200
R906 15K 1/4W
C926 47 NC
C919 10PF
R914 10 1/4W
Q904 2SK2996
ZD907 30V NC
ZD902 12V
C901 10UF 16V
D906 BYV20
C927 36PF
R915 10K 1/4W
R916 22K 1/4W
R917 22 1/4W
C914 NC
D915 NC
R902 2K2 1/4W
R932 220K 1/2W
R903 68K 1/2W
D920 1N4148
D901 1N4148
ZD903 5V
Q901 BF488
R918 470K 1/2W
R919 470K 1/2W
LED
D904 24V
R922 680 1/4W
R927 33K 3W
C915 0.01 2KV
C948 NC
D910 93C1060 -6-52T BYV26C
R928
D905 UF4004
T901 80A792-2-*
D918
C929
R910
Q902
15V DC OUT
R911
Q903
R912
C908
C946
D919 93A1060 -6T-52T BYV26C
C953
R939 1K8 3W
C931 100UF
R954 56K 1/2W
D921 31DF4
C934 390UF 80V
TP901
FB903
D922 RG4Z
C936 1000UF 35V
R957 NC
J061
Q909 NC
R958 NC
Q910 NC
C938 NC
R961
IC903 L7812CV
C937 1000UF 16V
R955 0.22 1/2W
DF923
D923 RG4Z
C939 1000UF 16V
C940 NC
R959 NC
R126 NC
C107 10UF 16V
J135
Q908 NC
R981 NC
R982 NC
R983 NC
R128 180 1/4W
Q916 NC
C952 NC
DF912
D912 RG4Z
C917 1000UF 16V
SYNC+
SYNC-
T402
D916 1N4148
R921 330
R924 110K
S901A
R929 3K3
Q905 2SA733
Q906 2SA733
R925 100K
R926 47K
C905 10UF
P901
IC904 PC123
Q907 2SC945
R901 470K 1/2W
C902 0.47 250VAC
C903 4700 250V
C904 4700 250V
L902 73A174-17-HJ
L901 73A174-2-HA
CN902
PR901 61A52-27-4W
RY901 77A260-5-4
BD901 TS4B05G
C913 0.68 630V
R907 0.47 3W
R976 100 1/2W
D939 93C64-11-52T 1N4148
R977 10K 1/4W
R978 10K 1/4W
Q913 57A419 -P-T 2SC945P
R900 10M 1/2W
14.5V
R908 JUMPER
R909 JUMPER
R913 2M 1/4W
DF907 D907 31GF6
C907 150UF 450V
R905 1M
R904 JUMPER
FB902
S901B
FB905
C900 4700 400V
C912 1000
C911 0.22
C910 200
R906 15K 1/4W
C926 47 NC
C919 10PF
R914 10 1/4W
Q904 2SK2996
ZD907 30V NC
ZD902 12V
C901 10UF 16V
D906 BYV20
C927 36PF
R915 10K 1/4W
R916 22K 1/4W
R917 22 1/4W
C914 NC
D915 NC
R902 2K2 1/4W
R932 220K 1/2W
R903 68K 1/2W
D920 1N4148
D901 1N4148
ZD903 5V
Q901 BF488
R918 470K 1/2W
R919 470K 1/2W
LED
D904 24V
R922 680 1/4W
R927 33K 3W
C915 0.01 2KV
C948 NC
D910 93C1060 -6-52T BYV26C
R928
D905 UF4004
T901 80A792-2-*
D918
C929
R910
Q902
15V DC OUT
R911
Q903
R912
C908
C946
D919 93A1060 -6T-52T BYV26C
C953
R939 1K8 3W
C931 100UF
R954 56K 1/2W
D921 31DF4
C934 390UF 80V
TP901
FB903
D922 RG4Z
C936 1000UF 35V
R957 NC
J061
Q909 NC
R958 NC
Q910 NC
C938 NC
R961
IC903 L7812CV
C937 1000UF 16V
R955 0.22 1/2W
DF923
D923 RG4Z
C939 1000UF 16V
C940 NC
R959 NC
R126 NC
C107 10UF 16V
J135
Q908 NC
R981 NC
R982 NC
R983 NC
R128 180 1/4W
Q916 NC
C952 NC
DF912
D912 RG4Z
C917 1000UF 16V
SYNC+
SYNC-
T402
D916 1N4148
R921 330
R924 110K
S901A
R929 3K3
Q905 2SA733
Q906 2SA733
R925 100K
R926 47K
C905 10UF
P901
IC904 PC123
Q907 2SC945
R930 2K2 1/4W
C906 1UF 16V
D903 1N4148
D908 1N4148
D911 NC
D913 1N4148
C916 1UF
D904 1N4148
D914 NC
R931 100K
C909 1UF 16V
R933 220K
D909 1N4148
D917 1N4148
C918 100UF
R701 10K
R704 1K8 1/4W
R705 100
R710 15 1/2W
Q701 2SD667AC
Q704 57A446-1-T 2SC1213C
Q702 2SA733P
R703 6K2
R702 91K
R706 10
C717 0.1
R715 JUMPER
C705 103
P701
ROTATION COIL
R901 470K 1/2W
C999 0.22 300V
CN901
L
N
R902 2K2 1/4W
R932 220K 1/2W
R903 68K 1/2W
D920 1N4148
D901 1N4148
ZD903 5V
Q901 BF488
R918 470K 1/2W
R919 470K 1/2W
LED
D904 24V
R922 680 1/4W
R927 33K 3W
C915 0.01 2KV
C948 NC
D910 93C1060 -6-52T BYV26C
R928
D918
C929
R910
Q902
15V DC OUT
R911
Q903
R912
C908
C946
D919 93A1060 -6T-52T BYV26C
C953
R939 1K8 3W
C931 100UF
R954 56K 1/2W
D921 31DF4
C934 390UF 80V
TP901
FB903
D922 RG4Z
C936 1000UF 35V
R957 NC
J061
Q909 NC
R958 NC
Q910 NC
C938 NC
R961
IC903 L7812CV
C937 1000UF 16V
R955 0.22 1/2W
DF923
D923 RG4Z
C939 1000UF 16V
C940 NC
R959 NC
R126 NC
C107 10UF 16V
J135
Q908 NC
R981 NC
R982 NC
R983 NC
R128 180 1/4W
Q916 NC
C952 NC
DF912
D912 RG4Z
C917 1000UF 16V
T901 80A792-2-*
OFF
7V
15V
80V
48V
H.CENTER
P903
T903 79A167 -120-T
FB904
Q911 IRF634
R962 100 1/4W
D924 93C64-11-52T 1N4148
R960 47K
C941 0.1
C955 220 500V
R979 270 3W
C912 C1213AC
Q915 A673AC
C943 100PF
Q914 57A419-P-T 2SC945P
R956 2K7 1/4W
C942 47
C944 10UF
R963 10 1/4W
C950 220 1KV
D925 RG4
DF925
R964 7.5 2W
R968 7.5 2W
D927 FR103
D926 FR103
C930 47UF
C935 47UF
R969 270 3W
C955 220 500V
DF925
D925 RG4
B+
PWMO
H.T
P42
P23
P38
HS
EW
12V
SUSPEND
-12V
H.T
G.LED
5V
HS
VS
ROTATION
CS1
CS2
CS3
CS4
CS0
VSAWO
-10V
B+
50V
H-OUT
P42
P38
EW
CS3
CS4
CS2
CS0
01/08/2002
05/29/2002
06/28/2002