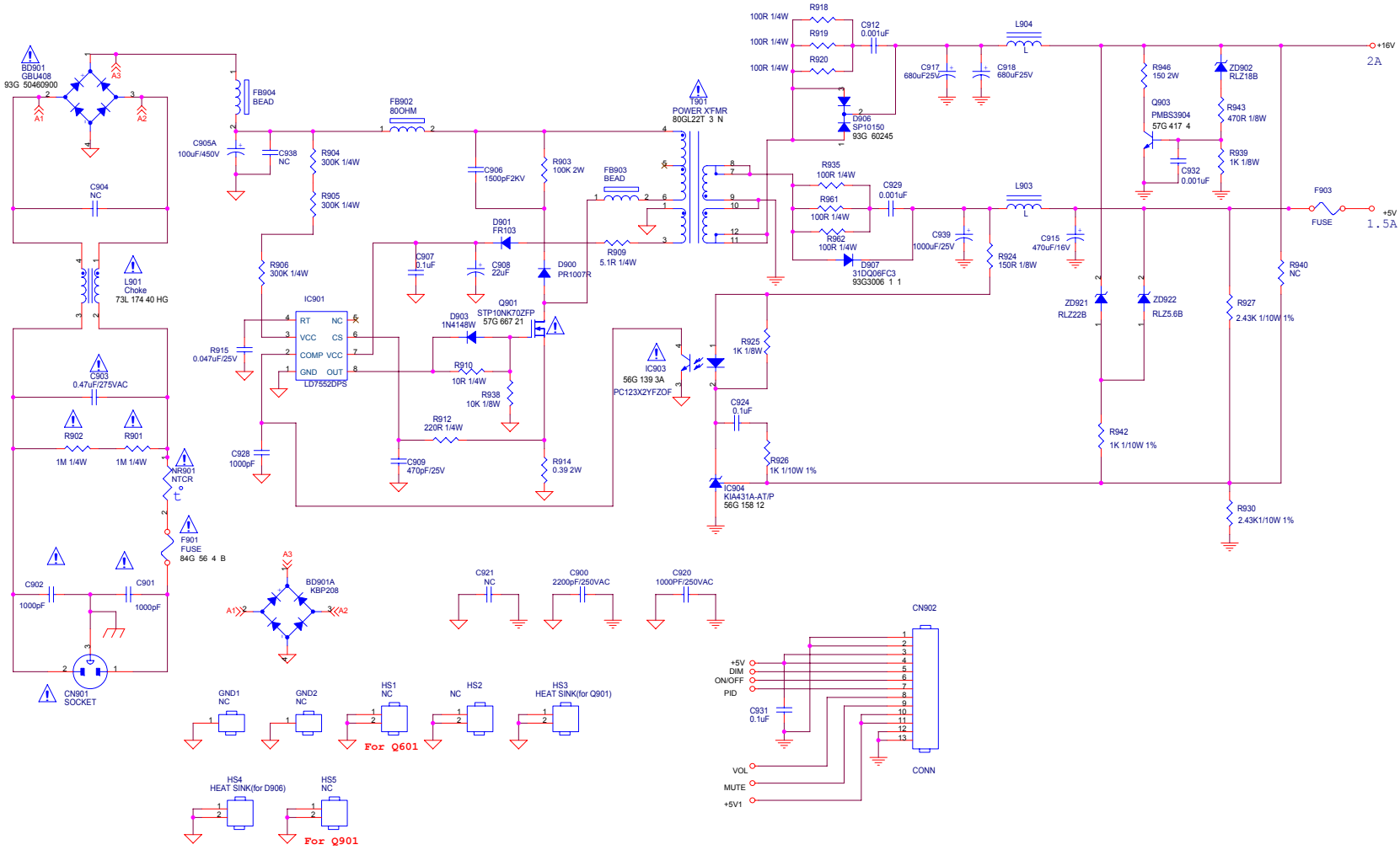
BD901
GBU408
93G 50460900
A1
A2
A3
C904
NC
L901
Choke
73L 174 40 HG
C903
0.47uF/275VAC
R902
1M 1/4W
R901
1M 1/4W
NR901
NTCR
F901
FUSE
84G 56 4 B
C902
1000pF
C901
1000pF
CN901
SOCKET
FB904
BEAD
C905A
100uF/450V
C938
NC
R904
300K 1/4W
R905
300K 1/4W
R906
300K 1/4W
R915
0.047uF/25V
IC901
RT
VCC
COMP
GND
NC
CS
VCC
OUT
LD7552DPS
C928
1000pF
FB902
80OHM
C906
1500pF2KV
R903
100K 2W
FB903
BEAD
D901
FR103
C907
0.1uF
C908
22uF
D900
PR1007R
R909
5.1R 1/4W
D903
1N4148W
Q901
STP10NK70ZFP
57G 667 21
R910
10R 1/4W
R938
10K 1/8W
R912
220R 1/4W
C909
470pF/25V
R914
0.39 2W
T901
POWER X'FMR
80GL22T 3 N
IC903
56G 139 3A
PC123X2YFZOF
R925
1K 1/8W
C924
0.1uF
R926
1K 1/10W 1%
IC904
KIA431A-AT/P
56G 158 12
R918
100R 1/4W
R919
100R 1/4W
R920
100R 1/4W
C912
0.001uF
D906
SP10150
93G 60245
C917
680uF25V
C918
680uF25V
L904
R935
100R 1/4W
R961
100R 1/4W
R962
100R 1/4W
C929
0.001uF
D907
31DQ06FC3
93G3006 1 1
C939
1000uF/25V
L903
R924
150R 1/8W
C915
470uF/16V
R946
150 2W
ZD902
RLZ18B
Q903
PMBS3904
57G 417 4
R943
470R 1/8W
C932
0.001uF
R939
1K 1/8W
F903
FUSE
+16V
2A
+5V
1.5A
R940
NC
ZD921
RLZ22B
ZD922
RLZ5.6B
R927
2.43K 1/10W 1%
R942
1K 1/10W 1%
R930
2.43K1/10W 1%
BD901A
KBP208
C921
NC
C900
2200pF/250VAC
C920
1000PF/250VAC
CN902
+5V
DIM
ON/OFF
PID
C931
0.1uF
VOL
MUTE
+5V1
CONN
GND1
NC
GND2
NC
HS1
NC
For Q601
HS2
NC
HS3
HEAT SINK(for Q901)
HS4
HEAT SINK(for D906)
HS5
NC
For Q901