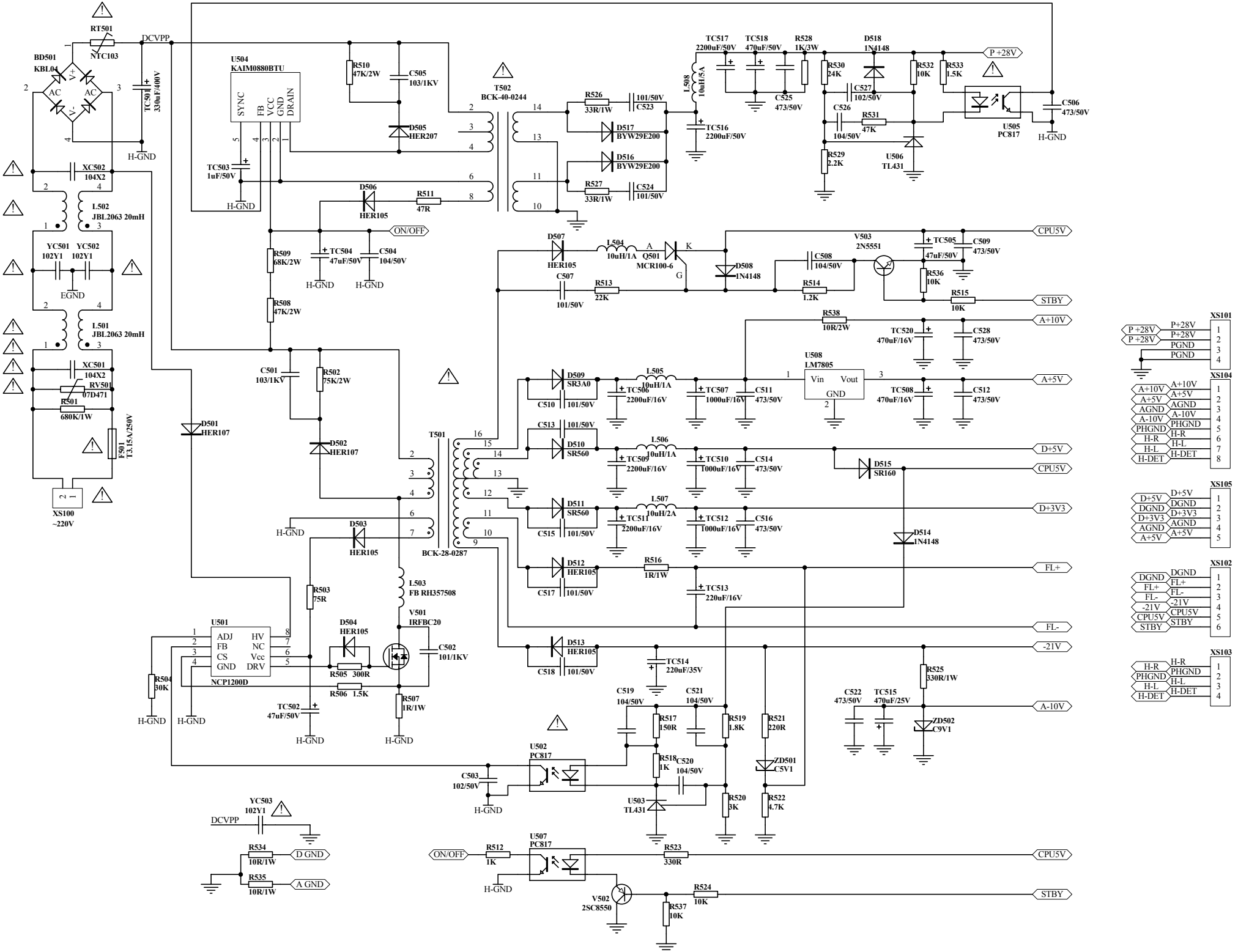
RT501
NTC103
DCVPP
BD501
KBL04
AC
AC
V+
V-
TC501
330uF/400V
H-GND
XC502
104X2
L502
JBL2063 20mH
YC501
102Y1
YC502
102Y1
EGND
L501
JBL2063 20mH
XC501
104X2
RV501
07D471
R501
680K/1W
F501
T3.15A/250V
XS100
~220V
U504
KAIM0880BTU
SYNC
FB
VCC
GND
DRAIN
TC503
1uF/50V
R510
47K/2W
C505
103/1KV
D505
HER207
D506
HER105
R511
47R
ON/OFF
R509
68K/2W
TC504
47uF/50V
C504
104/50V
R508
47K/2W
C501
103/1KV
R502
75K/2W
D501
HER107
D502
HER107
T502
BCK-40-0244
R526
33R/1W
101/50V
C523
D517
BYW29E200
D516
BYW29E200
R527
33R/1W
C524
101/50V
L508
10uH/5A
TC516
2200uF/50V
TC517
2200uF/50V
TC518
470uF/50V
C525
473/50V
R528
1K/3W
D518
1N4148
R530
24K
C527
102/50V
C526
104/50V
R531
47K
R529
2.2K
U506
TL431
R532
10K
R533
1.5K
P +28V
U505
PC817
C506
473/50V
D507
HER105
L504
10uH/1A
Q501
MCR100-6
D508
1N4148
C508
104/50V
V503
2N5551
TC505
47uF/50V
C509
473/50V
CPU5V
C507
101/50V
R513
22K
R514
1.2K
R536
10K
R515
10K
STBY
R538
10R/2W
TC520
470uF/16V
C528
473/50V
A+10V
U508
LM7805
Vin
Vout
GND
TC508
470uF/16V
C512
473/50V
A+5V
D509
SR3A0
C510
101/50V
L505
10uH/1A
TC506
2200uF/16V
TC507
1000uF/16V
C511
473/50V
C513
101/50V
D510
SR560
L506
10uH/1A
TC509
2200uF/16V
TC510
1000uF/16V
C514
473/50V
D515
SR160
D+5V
CPU5V
T501
BCK-28-0287
D511
SR560
C515
101/50V
L507
10uH/2A
TC511
2200uF/16V
TC512
1000uF/16V
C516
473/50V
D+3V3
D514
1N4148
D503
HER105
D512
HER105
C517
101/50V
R516
1R/1W
TC513
220uF/16V
FL+
FL-
R503
75R
L503
FB RH357508
V501
IRFBC20
U501
ADJ
FB
CS
GND
HV
NC
Vcc
DRV
NCP1200D
D504
HER105
R505
300R
R506
1.5K
C502
101/1KV
R504
30K
TC502
47uF/50V
R507
1R/1W
D513
HER105
C518
101/50V
TC514
220uF/35V
-21V
R525
330R/1W
C522
473/50V
TC515
470uF/25V
ZD502
C9V1
A-10V
C519
104/50V
R517
150R
C521
104/50V
R519
1.8K
R521
220R
ZD501
C5V1
R518
1K
C520
104/50V
U502
PC817
C503
102/50V
U503
TL431
R520
3K
R522
4.7K
YC503
102Y1
R534
10R/1W
D GND
R535
10R/1W
A GND
U507
PC817
R512
1K
R523
330R
V502
2SC8550
R524
10K
R537
10K
XS101
P +28V
P +28V
PGND
PGND
XS104
A+10V
A+5V
AGND
A-10V
PHGND
H-R
H-L
H-DET
XS105
D+5V
DGND
D+3V3
AGND
A+5V
XS102
DGND
FL+
FL-
-21V
CPU5V
STBY
XS103
H-R
PHGND
H-L
H-DET